PROJECT REFERENCE NO.	SHEET NO.
W-5705B	Sig. 2

EDI MODEL 2018ECL-NC CONFLICT MONITOR PROGRAMMING DETAIL

(remove jumpers and set switches as shown)

REMOVE DIODE JUMPERS 1-5, 1-6, 1-9, 1-11, 1-15, 2-5, 2-6, 2-9, 2-11, 2-13, 2-15, 4-8, 4-10, 4-12, 4-16, 5-9, 5-11, 5-13, 6-9, 6-11, 6-13, 6-15, 8-10, 8-12, 8-16, 9-11, 9-13, 9-15, 10-12, 10-16, 11-13, 11-15, 12-16 and 13-15.

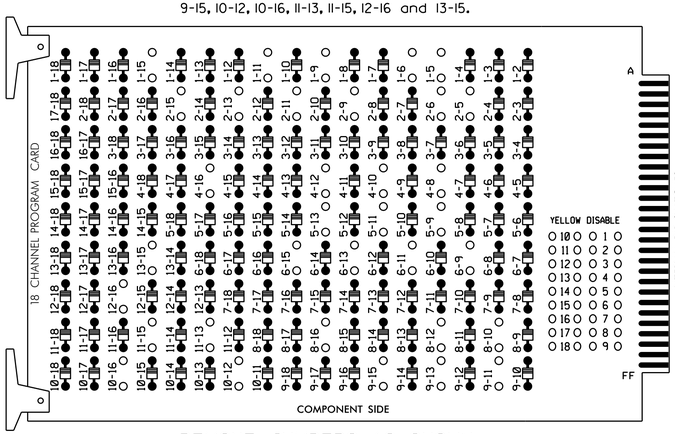

REMOVE JUMPERS AS SHOWN

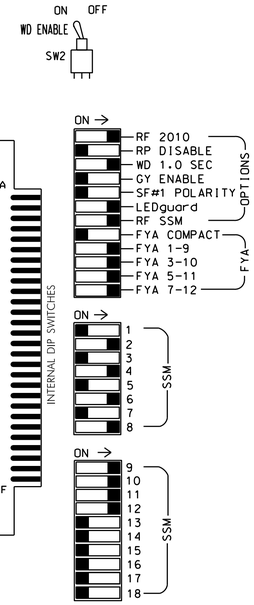

NOTES:

1. Card is provided with all diode jumpers in place. Removal of any jumper allows its channels to run concurrently.
2. Ensure jumpers SEL2-SEL5 and SEL9 are present on the monitor board.
3. Ensure that Red Enable is active at all times during normal operation.
4. Connect serial cable from conflict monitor to comm. port 1 of 2070 controller. Ensure conflict monitor communicates with 2070.

NOTES

1. To prevent "flash-conflict" problems, insert red flash program blocks for all unused vehicle load switches in the output file. The installer shall verify that signal heads flash in accordance with the Signal Plans.
2. Program controller to start up in phases 2 and 6 green.
3. Enable simultaneous gap-out feature, on controller unit, for all phases.
4. Program phases 4 and 8, on controller unit, for dual entry.
5. Program phases 2 and 6, on controller unit, for volume density operation.
6. The cabinet and controller are part of the Raleigh City Signal System.

EQUIPMENT INFORMATION

CONTROLLER.....2070
CABINET.....332 W/ AUX
SOFTWARE.....SE-PAC2070
CABINET MOUNT.....BASE
OUTPUT FILE POSITIONS...18 WITH AUX FILE
LOAD SWITCHES USED.....S1,S2,S3,S5,S7,S8,S9,S11,S12, AUX S1,AUX S2,AUX S4,AUX S5
PHASES USED.....1,2,4,5,6,8,2 PED,6 PED,8 PED
OVERLAP A.....✱
OVERLAP B.....✱
OVERLAP C.....✱
OVERLAP D.....✱
✱ SEE SHEET 2 FOR OVERLAP PROGRAMMING

SIGNAL HEAD HOOK-UP CHART

LOAD SWITCH NO.	S1	S2	S3	S4	S5	S6	S7	S8	S9	S10	S11	S12	AUX S1	AUX S2	AUX S3	AUX S4	AUX S5	AUX S6
CMU CHANNEL NO.	1	2	13	3	4	14	5	6	15	7	8	16	9	10	17	11	12	18
PHASE	1	2	2 PED	3	4	4 PED	5	6	6 PED	7	8	8 PED	OLA	OLB	SPARE	OLC	OLD	SPARE
SIGNAL HEAD NO.	11★	21,22 23	P21, P22	NU	41,42	NU	51★	61,62 63	P61, P62	NU	81,82	P81, P82	11★	83★	NU	51★	43★	NU
RED		128			101			134			107							
YELLOW	✱	129			102		✱	135			108							
GREEN		130			103			136			109							
RED ARROW													A121	A124		A114	A101	
YELLOW ARROW													A122	A125		A115	A102	
FLASHING YELLOW ARROW													A123	A126		A116	A103	
GREEN ARROW	127						133											
✋			113						119			110						
🚶			115						121			112						

NU = Not Used

✱ Denotes install load resistor. See load resistor installation detail this sheet.

★ See pictorial of head wiring in detail below.

FYA SIGNAL WIRING DETAIL

(wire signal heads as shown)

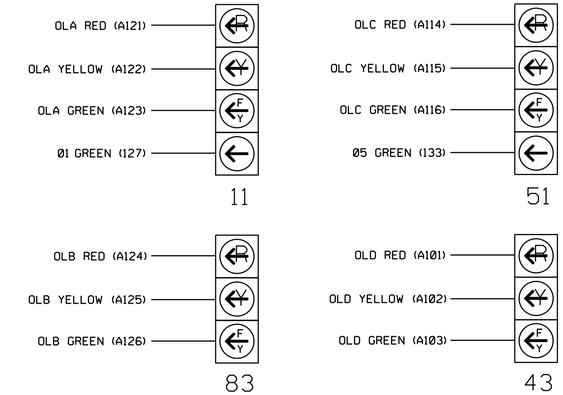

NOTE: See sheet 2 for Protected & Permitted Phases programming.

INPUT FILE POSITION LAYOUT

(front view)

		1	2	3	4	5	6	7	8	9	10	11	12	13	14
FILE "I"	U	Ø1 1A	Ø2 2A	Ø2 2C	SLOT EMPTY	SLOT EMPTY	Ø4 4A	SLOT EMPTY	SLOT EMPTY	SLOT EMPTY	SLOT EMPTY	SLOT EMPTY	Ø2 PED DC ISOLATOR	Ø6 PED DC ISOLATOR	FS DC ISOLATOR
	L	NOT USED	Ø2 2B	NOT USED			Ø4 4B						NOT USED	Ø8 PED DC ISOLATOR	ST DC ISOLATOR
FILE "J"	U	Ø5 5A	Ø6 6A	Ø6 6C	SLOT EMPTY	SLOT EMPTY	Ø8 8A	SLOT EMPTY	SLOT EMPTY	SLOT EMPTY	SLOT EMPTY	SLOT EMPTY	SLOT EMPTY	SLOT EMPTY	SLOT EMPTY
	L	NOT USED	Ø6 6B	NOT USED			Ø8 8B								

EX.: 1A, 2A, ETC. = LOOP NO.'S

FS = FLASH SENSE
ST = STOP TIME

INPUT FILE CONNECTION & PROGRAMMING CHART

LOOP NO.	LOOP TERMINAL	INPUT FILE POS.	PIN NO.	DETECTOR NO.	NEMA PHASE	DELAY TIME	EXTEND (STRETCH) TIME
1A	TB2-1,2	I1U	56	1	1	5	
2A	TB2-5,6	I2U	39	3	2		
2B	TB2-7,8	I2L	43	4	2		
2C	TB2-9,10	I3U	63	5	2		
4A	TB4-9,10	I6U	41	11	4	3	
4B	TB4-11,12	I6L	45	12	4	10	
5A	TB3-1,2	J1U	55	19	5	5	
6A	TB3-5,6	J2U	40	21	6		
6B	TB3-7,8	J2L	44	22	6		
6C	TB3-9,10	J3U	64	23	6		
8A	TB5-9,10	J6U	42	31	8	3	
8B	TB5-11,12	J6L	46	32	8	10	
PED PUSH BUTTONS							
P21,P22	TB8-4,6	I12U	67	PED 2	2 PED		
P61,P62	TB8-7,9	I13U	68	PED 6	6 PED		
P81,P82	TB8-8,9	I13L	70	PED 8	8 PED		

NOTE:
INSTALL DC ISOLATORS IN INPUT FILE SLOTS I12 AND I13.

INPUT FILE POSITION LEGEND: J2L
FILE J
SLOT 2
LOWER

This Electrical Detail supersedes the detail sealed on 6-06-17.

LOAD RESISTOR INSTALLATION DETAIL

(install resistors as shown below)

ACCEPTABLE VALUES

VALUE (ohms)	WATTAGE
1.5K - 1.9K	25W (min)
2.0K - 3.0K	10W (min)

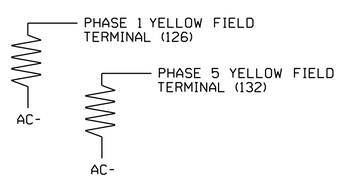

THIS ELECTRICAL DETAIL IS FOR
THE SIGNAL DESIGN: 05-2127
DESIGNED: May 2017
SEALED: 2-20-18
REVISED: N/A

COUNTDOWN PEDESTRIAN SIGNAL OPERATION

Countdown Ped Signals are required to display timing only during Ped Clearance Interval. Consult Ped Signal Module user's manual for instructions on selecting this feature.

Electrical Detail - Sheet 1 of 3

DOCUMENT NOT CONSIDERED FINAL UNLESS ALL SIGNATURES COMPLETED

ELECTRICAL AND PROGRAMMING DETAILS FOR:

Prepared in the Offices of:
Transportation Mobility and Safety Division
STATE OF NORTH CAROLINA DEPARTMENT OF TRANSPORTATION
Signals Management Section
750 N.Greenfield Pkwy,Garner,NC 27529

SR 1012 (Western Boulevard) at Clanton Street/Whitmore Drive

Division 5 Wake County Raleigh

PLAN DATE: February 2018 REVIEWED BY:
PREPARED BY: James Peterson REVIEWED BY:

	INIT.	DATE

SEAL
NORTH CAROLINA PROFESSIONAL SEAL 036880 ENGINEER KEITH M. MINS

DocuSigned by: Keith M. Mins 2/26/2018
2F8D7B6EBCD34A5 DATE

SIG. INVENTORY NO. 05-2127

23-FEB-2018 11:30
S:★ITS★SIGNALS★Workgroups★Sig Mgmt★Petersonjm★052127_sm.ele_20170606.dgn
jtpeterson